ALUTECH PROFILE SYSTEMS

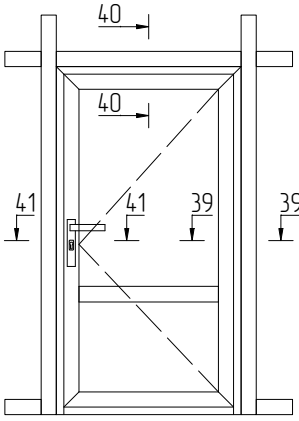

39–39

Масштаб 1:2

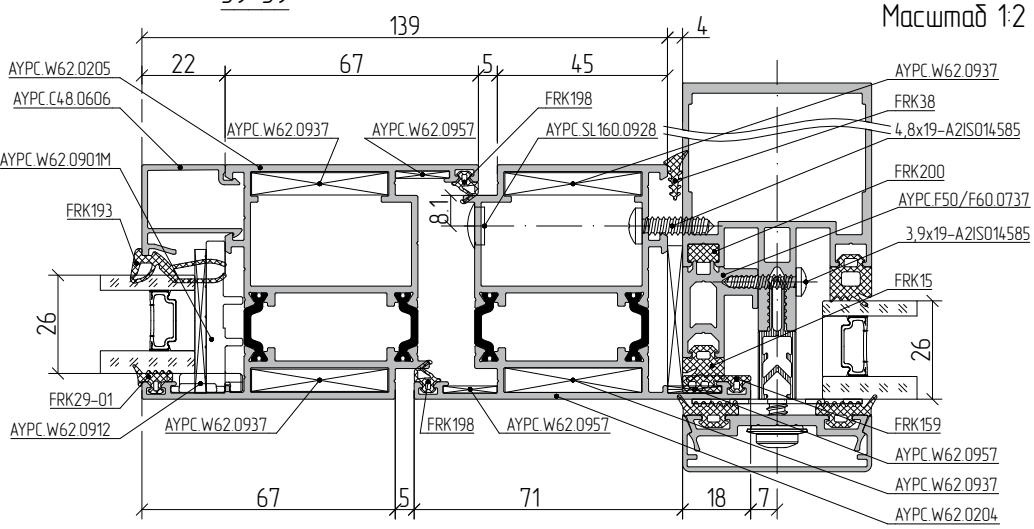

41–41

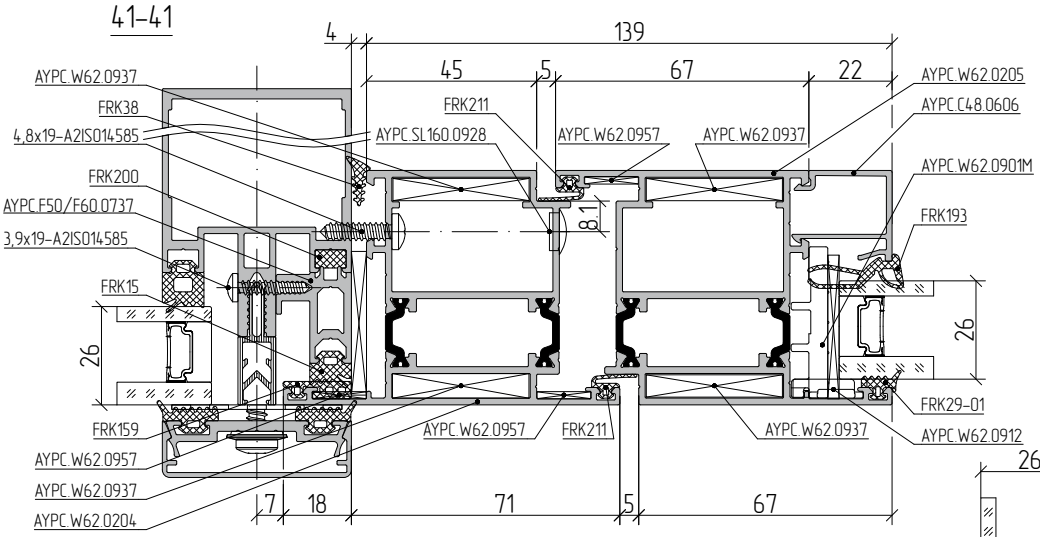
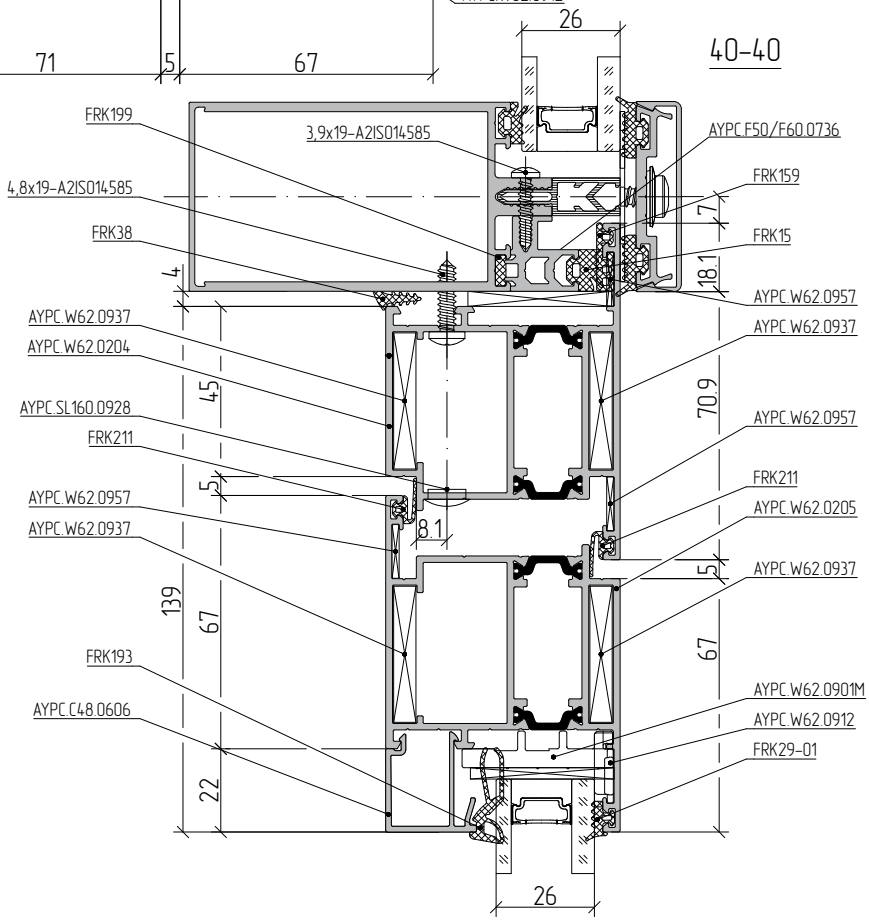
40–40